IXMO Planner

Your individual summary

Figure shows chrome-plated model

Application area:	Shower
Control engineering:	Thermostatic mixer
Appliance:	1
Design:	Round
Handle:	Pure
Oberfläche:	Edelstahl-finish

IXMO Planner

Your individual summary

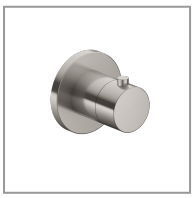

Thermostatic mixer DN 15
Art.-Nr. 59553070001

Installation unit for thermostatic mixer DN 15
Art.-Nr. 59553000070

Stop valve with wall outlet for shower hose and hand shower bracket DN 15
Art.-Nr. 59541070201

Installation unit for stop valve with wall outlet for shower hose DN 15
Art.-Nr. 59541000170

Shower hose
Art.-Nr. 54995071200

Round pencil hand shower
Art.-Nr. 56080070100

Mounting rail
Art.-Nr. 59570000001

Mounting bracket
Art.-Nr. 59571000001

Also available is the optional matching IXMO single lever basin mixer:

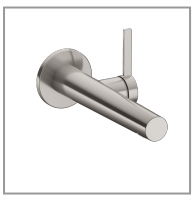

Single lever basin mixer
Art.-Nr. 59516071101

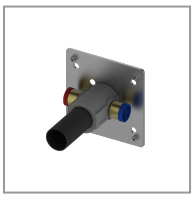

Installation unit for single lever basin mixer
Art.-Nr. 59916000075

IXMO

59553070001 Thermostatic mixer DN 15

PRODUCT

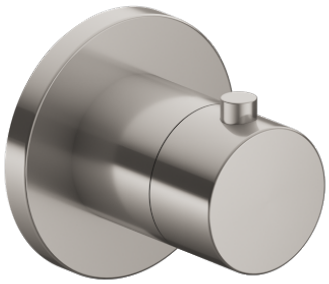

DRAWING

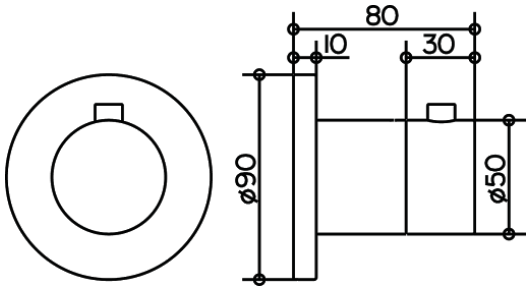

PRODUCT DESCRIPTION

Set complete with:
handle, sleeve and rosette (round)
suitable for rough part no. 59553 000070

SURFACE FINISH

stainless steel finish

DIMENSIONS

Projection: 80 mm
Diameter: 90 mm

IXMO

59553000070 Installation unit for thermostatic mixer DN 15

PRODUCT

DRAWING

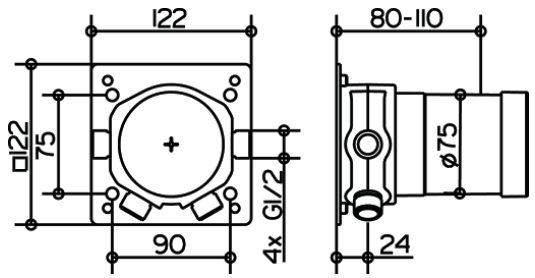

PRODUCT DESCRIPTION

Rough part for recessed installation

IXMO

59541070201 Stop valve with wall outlet for shower hose and hand shower bracket DN 15

PRODUCT

DRAWING

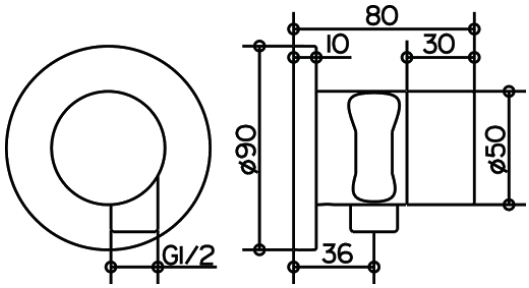

PRODUCT DESCRIPTION

Set complete with:
handle, casing, rosette (round) and stop cock,
intrinsically safe against backflow,
suitable for stop cock no. 59541 000170

SURFACE FINISH

stainless steel finish

DIMENSIONS

Projection: 80 mm
Diameter: 90 mm

IXMO

59541000170 Installation unit for stop valve with wall outlet for shower hose DN 15

PRODUCT

DRAWING

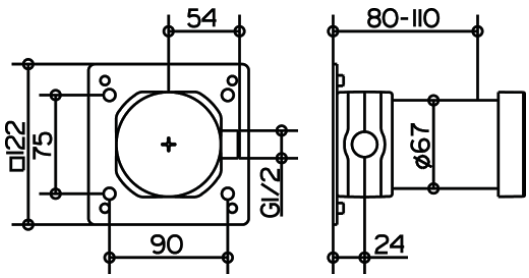

PRODUCT DESCRIPTION

Rough part for recessed installation

IXMO

54995071200 Shower hose

PRODUCT

PRODUCT DESCRIPTION

metal colour, kink protection, very flexible
with double-sides DN 15 conical nuts,
twist-protection at the shower head end

DIMENSIONS

Length: 1250 mm

IXMO

56080070100 Round pencil hand shower

DRAWING

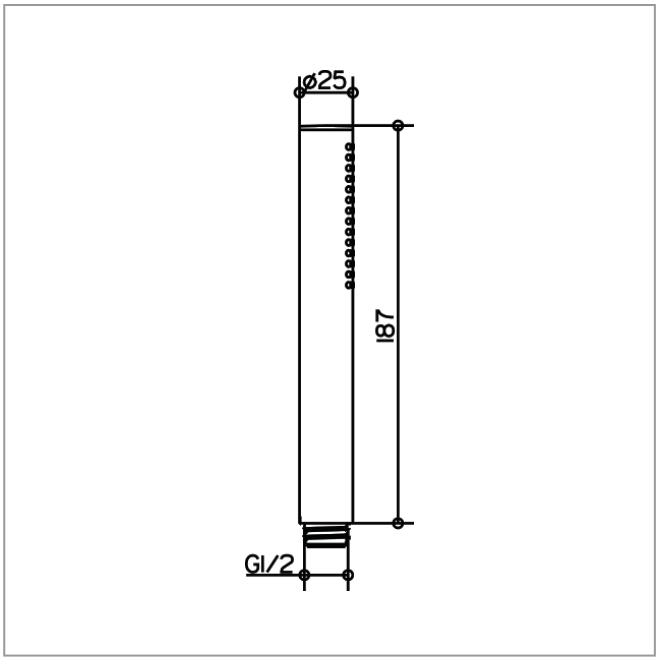

PRODUCT DESCRIPTION

with normal jet

IXMO

59570000001 Mounting rail

PRODUCT

DRAWING

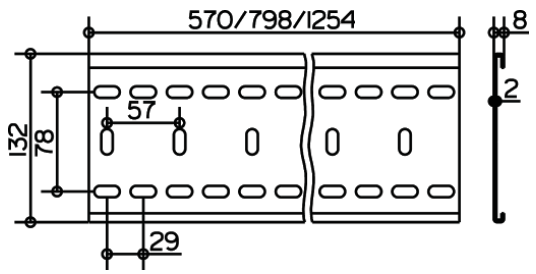

PRODUCT DESCRIPTION

for an easy an steplessly adjustable installation of the IXMO function units
Length 570 mm

DIMENSIONS

Length: 570 mm

PRODUCT VARIANT

Article-No. 59570 000002, length 800 mm
Article-No. 59570 000003, length 1250 mm

IXMO

59571000001 Mounting bracket

PRODUCT

DRAWING

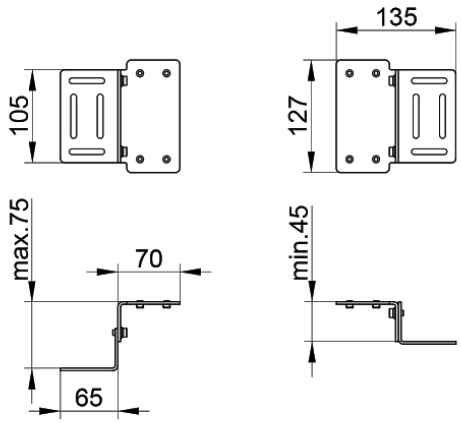

PRODUCT DESCRIPTION

Set (2 Stück), justierbar
für Montageschiene 59570

IXMO

59516071101 Single lever basin mixer

PRODUCT

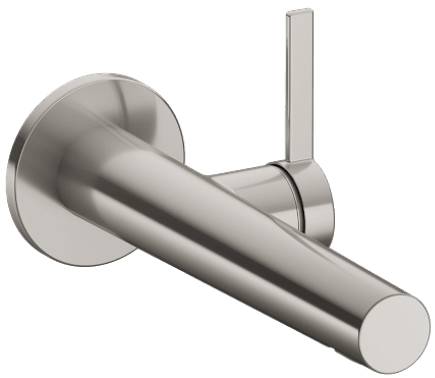

DRAWING

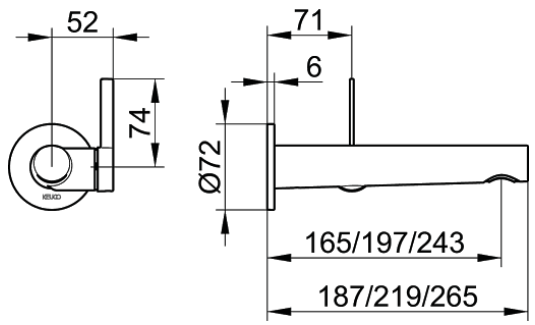

PRODUCT DESCRIPTION

concealed, DN 15, with round decorative disc,
mixing cartridge with ceramic sealing gaskets
aerator SLIM SSR M 24x1, adjustable,
flow rate limited to 7,6 l/min.
in combination with rough part 59916 000075

SURFACE FINISH

stainless steel finish

DIMENSIONS

Projection: 219 mm

PRODUCT VARIANT

Article-No. 59516 070101, projection 187 mm
Article-No. 59516 072101, projection 265 mm

IXMO

59916000075 Installation unit for single lever basin mixer

PRODUCT

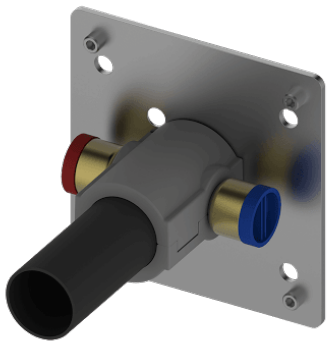

DRAWING

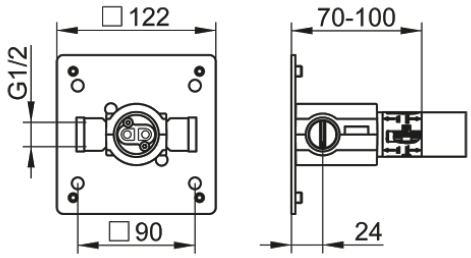

PRODUCT DESCRIPTION

Rough part for recessed installation
installation depth 70 - 100 mm